12MR2000X-NDY

Professional Mid Range Driver

KEY FEATURES

- 4" Voice coil
- 2000 Watts continuous program power
- 100 dB Sensitivity
- 100 - 5,200 Hz



GENERAL SPECIFICATIONS

Nominal Diameter	12" (305 mm)
Nominal impedance	8 Ohm
Nominal Power Handling	**1000 Watts**
Continuous Program Power (RMS)	2000 Watts
Max Peak Power	4000 Watts
Sensitivity 2.83V at 1m	**100 dB**
Recommended High Pass Crossover* *For Full Power Handling	160 Hz * *12db Per Octave Crossover
Frequency Response	**100 - 5,200 Hz**
Voice Coil Diameter	4" (100 mm)
Voice Coil Wire	CCAW
Voice Coil Winding Depth	18.20 mm
Former Material	Glass Fiber
Magnetic Gap Depth	12.0 mm
Frame Material	Die cast aluminum

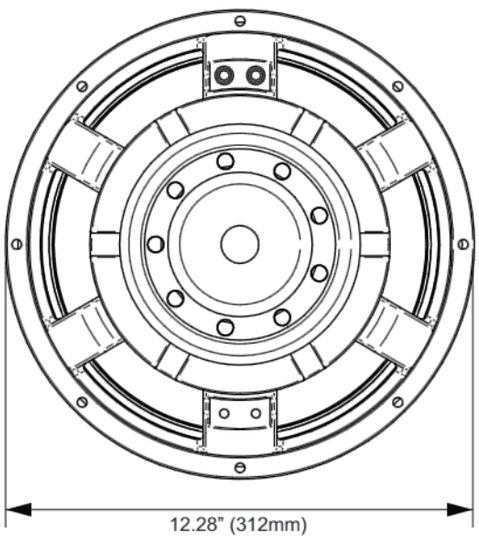

THIELE-SMALL PARAMETERS

Equivalent Volume	Vas	35.9 l
Excursion (mathematical)***	Xmax	6.10 mm
Free Air Resonance	Fs	67.2 Hz
Mechanical Factor	Qms	16.7
Electrical Factor	Qes	0.32
Total Factor	Qts	0.31
Cone Area	Sd	573 cm^2
Mechanical Mass	Mms	71.5 g
Bl Factor	Bl	22.7 Tm
Dc Resistance	Re	5.4 Ohm
Inductance	Le	0.40 mH at 1 kHz
Mechanical Mass Without Air	Mmd	63.7 g
Mechanical Compliance	Cms	0.078 mm/N

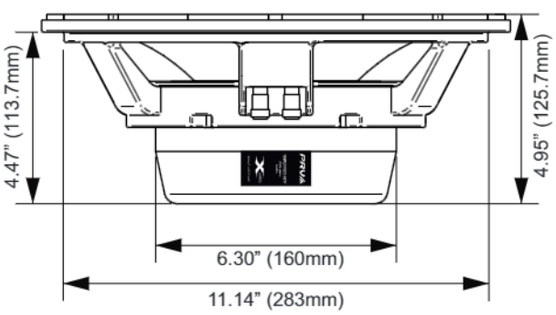

EXTRA INFO

Overall Diameter	12.28" (312 mm)
Front Mount Baffle Cutout	11.14" (283 mm)
Mounting Depth	4.47" (113.7 mm)
Overall Depth	4.95" (125.7 mm)
Net Weight	13.45 Lbs (7.0 kg)
Shipping Weight	17.60 Lbs (8.0 kg)
Carton Dimensions W x L x H	16.14" x 16.02" x 8.46" (410 x 407 x 215 mm)

Impedance Curve - Free Air

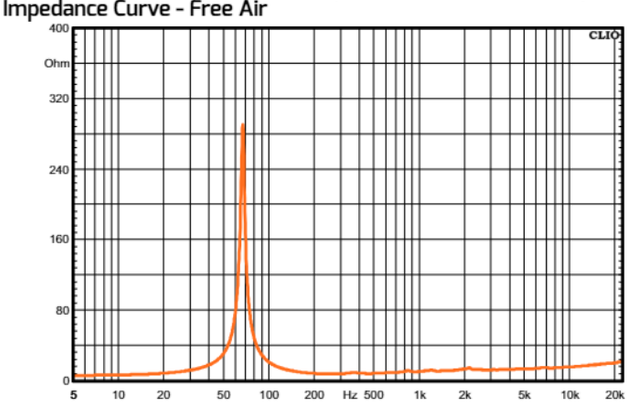

Frequency Response Measured at 2.83V/1m

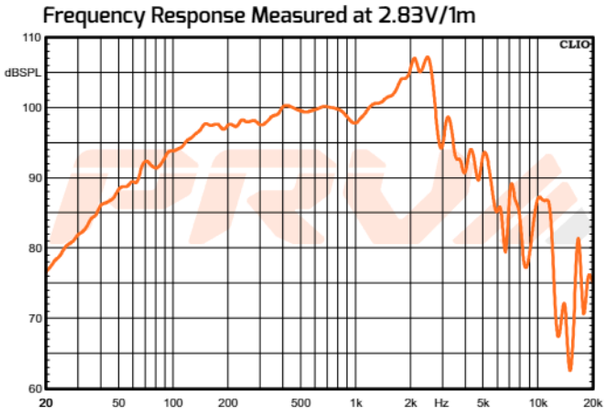

**Xmax=(Voice coil winding depth-Magnetic Gap depth)/2+ Magnetic Gap Depth/4

PRV AUDIO USA (USA and Export)
POMPANO BEACH, FL
support@prvaudio.com
www.prvaudio.com

PRV Audio strives to manufacture the best drivers in the Professional Loudspeaker industry. Specifications are subject to change due to continuous product improvement - Rev: 04/25