12MR2000X v2

Professional Mid Range Driver

PRV audio BRAZIL

KEY FEATURES

- 4" Voice coil
- 2000 Watts continuous program power
- 100 dB Sensitivity
- 100 - 5,300 Hz



GENERAL SPECIFICATIONS

Nominal Diameter	12" (305 mm)
Nominal impedance	8 Ohm
Nominal Power Handling	**1000 Watts**
Continuous Program Power (RMS)	2000 Watts
Max Peak Power	4000 Watts
Sensitivity 2.83V at 1m	**100 dB**
Recommended Hi Pass Crossover* *For Full Power Handling	160 Hz* *12db Per Octave Crossover
Frequency Response	**100 - 5,300 Hz**
Voice Coil Diameter	4" (100 mm)
Voice Coil Wire	CCAW
Voice Coil Winding Depth	18.2 mm
Former Material	Glass fiber
Magnetic Gap Depth	10.0 mm
Frame Material	Die cast Aluminum

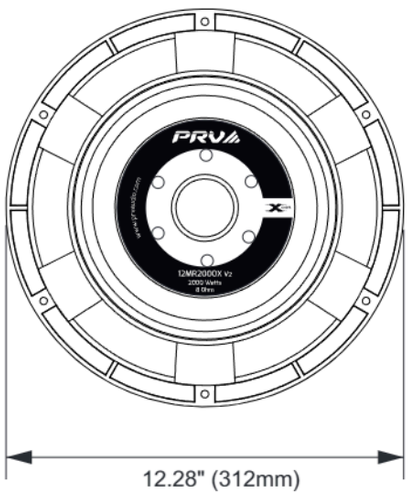

THIELE-SMALL PARAMETERS

Equivalent Volume	Vas	39.61 l
Excursion (mathematical)***	Xmax	6.60 mm
Free Air Resonance	Fs	64.7 Hz
Mechanical Factor	Qms	17.19
Electrical Factor	Qes	0.28
Total Factor	Qts	0.28
Cone Area	Sd	573 cm^2
Mechanical Mass	Mms	69.86 g
Bl Factor	Bl	23.19 Tm
Dc Resistance	Re	5.4 Ohm
Inductance	Le	0.43 mH at 1 kHz
Mechanical Mass Without Air	Mmd	62.11 g
Mechanical Compliance	Cms	0.086 mm/N

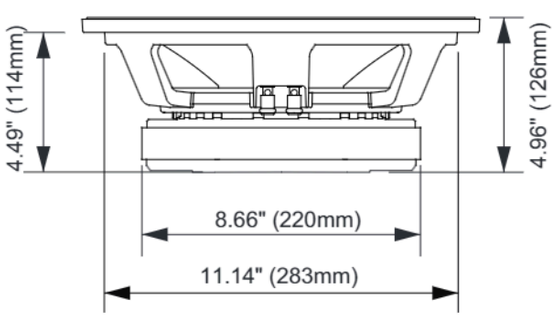

EXTRA INFO

Overall Diameter	12.28" (312 mm)
Front Mount Baffle Cutout	11.14" (283 mm)
Mounting Depth	4.48" (114 mm)
Overall Depth	4.96" (126 mm)
Net Weight	26.65 Lbs (12.08 kg)
Shipping Weight	28.15 Lbs (12.76 kg)
Carton Dimensions W x L x H	13.38" x 13.38" x 6.29" (340 x 340 x 160 mm)

Impedance Curve - Free Air

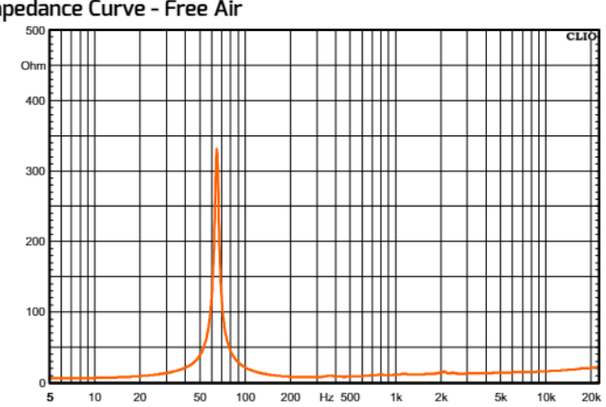

Frequency Response Measured at 2.83V/1m

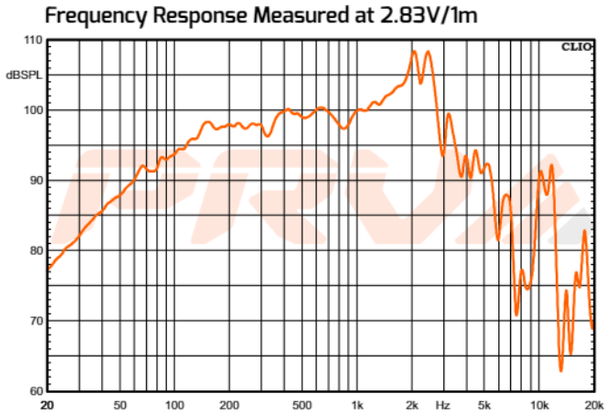

**Xmax=(Voice coil winding depth-Magnetic Gap depth)/2+ Magnetic Gap Depth/4

*** T-S parameters measured after 2 hours at 1/2 Rated power, pink noise preconditioning test

PRV AUDIO USA (USA and Export)
POMPANO BEACH, FL
support@prvaudio.com
www.prvaudio.com

PRV Audio strives to manufacture the best drivers in the Professional Loudspeaker industry. Specifications are subject to change due to continuous product improvement - Rev: 06/24